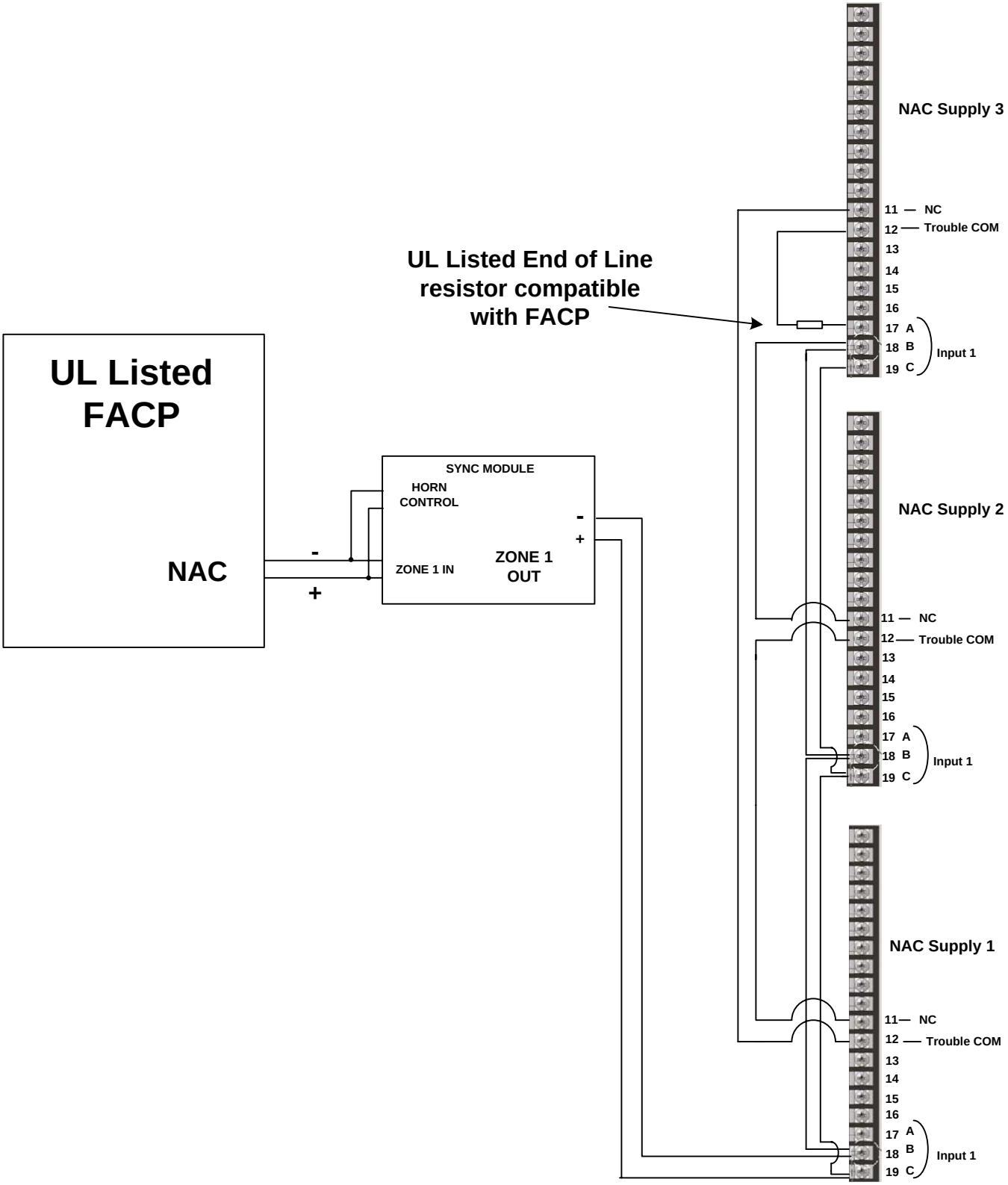
UL Listed End of Line resistor compatible with FACP
UL Listed FACP
NAC
-
+
SYNC MODULE
HORN CONTROL
ZONE 1 IN
ZONE 1 OUT
-
+
NAC Supply 3
11 — NC
12 — Trouble COM
13
14
15
16
17 A
18 B
19 C
Input 1
NAC Supply 2
11 — NC
12 — Trouble COM
13
14
15
16
17 A
18 B
19 C
Input 1
NAC Supply 1
11 — NC
12 — Trouble COM
13
14
15
16
17 A
18 B
19 C
Input 1